USN | | | | | | | | | | |

10ES43

Fourth Semester B.E. Degree Examination, June 2012

Control Systems

Time: 3 hrs. Max. Marks:100

Note: ***Answer FIVE full questions, selecting at least TWO questions from each part.***

Important Note : 1. On completing your answers, compulsorily draw diagonal cross lines on the remaining blank pages.
2. Any revealing of identification, appeal to evaluator and /or equations written eg, 42+8 = 50, will be treated as malpractice.

PART – A

1 a. Distinguish between open loop and closed loop systems, with examples. **(06 Marks)**

b. Write the differential equations of performance for the mechanical system shown in Fig.Q1(b). Draw its F-V analogous circuit.

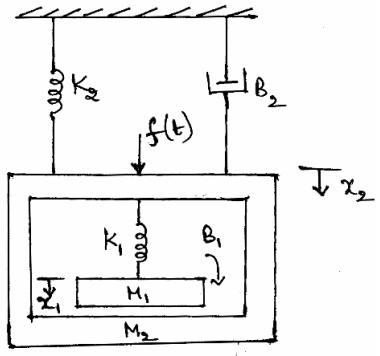

Fig.Q1(b) **(08 Marks)**

c. Obtain the transfer function of an armature controlled dc servomotor. **(06 Marks)**

2 a. Obtain the transfer function for the block diagram shown in Fig.Q2(a) using block diagram reduction technique.

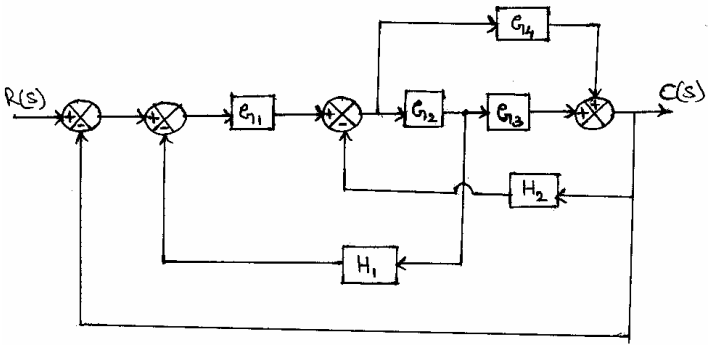

Fig.Q2(a) **(10 Marks)**

b. Obtain the closed loop transfer function $\frac{C(s)}{R(s)}$ for the signal flow graph of a system shown in Fig.Q2(b) by use of Mason's gain formula.

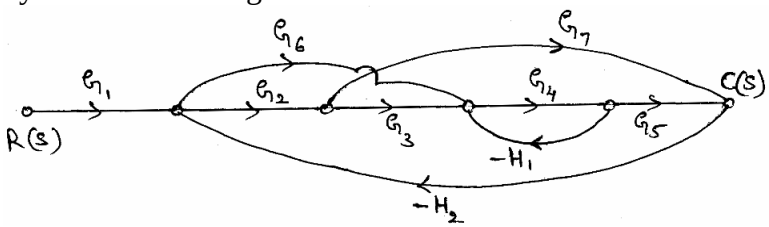

Fig.Q2(b) **(10 Marks)**

3 a. Derive expressions for peak response time t_p and maximum overshoot M_p of an under damped second order control system subjected to step input. **(06 Marks)**

b. A second order control system is represented by a transfer function given below:

$$\frac{\theta_0(s)}{T(s)} = \frac{1}{Js^2 + Fs + K}$$

where θ_0 is the proportional output and T is the input torque. A step unit of 10 N-m is applied to the system and test results are given below:

i) Maximum overshoot is 6%

ii) Peak time is 1 sec

iii) The steady state value of the output is 0.5 radian.

Determine the values of J, F and K. **(08 Marks)**

c. For a unity feedback control system with $G(s) = \frac{10(s+2)}{s^2(s+1)}$. Find:

i) The static error coefficients

ii) Steady state error when the input transform is $R(s) = \frac{3}{s} - \frac{2}{s^2} + \frac{1}{3s^2}$. **(06 Marks)**

4 a. Explain Routh-Hurwitz's criterion for determining the stability of a system and mention any three limitations of R-H criterion. **(10 Marks)**

b. A unity feedback control system is characterized by the open loop transfer function:

$$G(s) = \frac{K(s+13)}{s(s+3)(s+7)}$$

i) Using the Routh's criterion, calculate the range of values of K for the system to be stable

ii) Check if for K = 1, all the roots of the characteristic equation of the above system are more negative than –0.5. **(10 Marks)**

PART – B

5 a. Sketch the root locus for a unity feedback control system with open loop transfer function:

$$G(s) = \frac{K(s+2)(s+3)}{s(s+1)}$$ **(12 Marks)**

b. Show that the root loci for unity feedback control system with

$$G(s) = \frac{K(s^2 + 6s + 10)}{(s^2 + 2s + 10)}$$

are the arcs of circle of radius $\sqrt{10}$ and centered at the origin. **(08 Marks)**

6 a. Sketch the Bode plot of a unity feedback system whose open loop transfer function is given by $G(s) = \frac{K}{s(1+0.1s)(s+0.05s)}$.

i) Find the value of K for a gain margin of 10 dB.

ii) Find the value of K for a phase margin of 30°. **(14 Marks)**

6 b. Determine the open loop transfer function of a system whose approximate plot is shown in Fig.Q6(b).

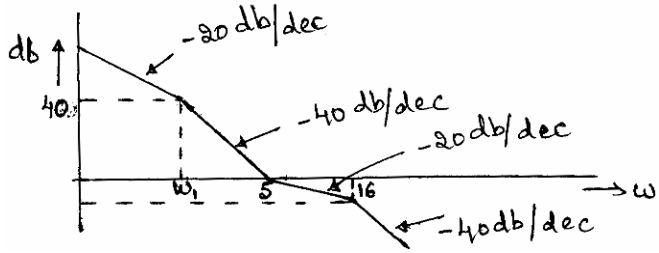

Fig.Q6(b) **(06 Marks)**

7 a. State and explain Nyquist stability criterion. **(06 Marks)**

b. Sketch the Nyquist plot for a system whose open loop transfer function is $G(s)H(s) = \frac{K(4s+1)}{s(2s-1)}$. Determine the range of K for which the system is stable. **(14 Marks)**

8 a. Define state variable and state transition matrix. List the properties of the state transition matrix. **(08 Marks)**

b. Obtain the state model of the electrical network shown in Fig.Q8(b) by choosing $V_1(t)$ and $V_2(t)$ as state variables.

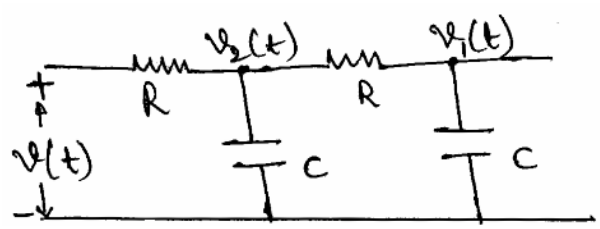

Fig.Q8(b) **(12 Marks)**

* * * * *