USN | | | | | | | | | | |

10EC44

Fourth Semester B.E. Degree Examination, June 2012
Signals and Systems

Time: 3 hrs. Max. Marks:100

Note: ***Answer FIVE full questions, selecting at least TWO questions from each part.***

Important Note : 1. On completing your answers, compulsorily draw diagonal cross lines on the remaining blank pages.
2. Any revealing of identification, appeal to evaluator and /or equations written eg, 42+8 = 50, will be treated as malpractice.

PART – A

1 a. Give a brief classification of signals. **(04 Marks)**

b. Check whether the following systems are linear, causal and time invariant or not.

i) $\frac{d^2y(t)}{dt^2} + 2y(t)\frac{dy(t)}{dt} + 3t\,y(t) = x(t)$ ii) $y(n) = x^2(n) + \frac{1}{x^2(n-1)}$. **(08 Marks)**

c. Classify the following signals or energy signals or power signals:

i) $x(n) = 2^n u(-n)$ ii) $x(n) = (j)^n + (j)^{-n}$. **(05 Marks)**

d. A system consists of several sub-systems connected as shown in Fig.Q(1) d. Find the operator H relating x (t) to y (t) for the following sub-system operators:

H_1: $y_1(t) = x_1(t)\ x_1(t-1)$ H_3: $y(t) = 1 + 2x_3(t)$

H_2: $y_2(t) = |x_2(t)|$ H_4: $y_4(t) = \cos(x_4(t))$. **(03 Marks)**

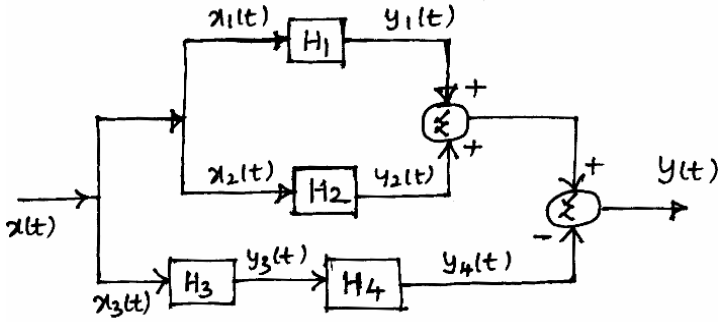

Fig.Q1(d)

2 a. Find the continuous-time convolution integral given below:

$Y(t) = \cos(\pi t)\{u(t+1) - u(t-3)\} * u(t)$. **(06 Marks)**

b. Consider the i/p signal x (n) and impulse responses (n) given below:

$$x(n) = \begin{cases} 1, & 0 \le n \le 4 \\ 0, & \text{otherwise} \end{cases}, \qquad h(n) = \begin{cases} \alpha^n & 0 \le n \le 6, \ |\alpha| < 1 \\ 0, & \text{otherwise} \end{cases}.$$

Obtain the convolution sum $y(n) = x(n) * h(n)$. **(08 Marks)**

c. Derive the following properties:

i) $x(n) \times h(n) = h(n) \times x(n)$ ii) $x(n) \times [h(n) \times g(n)] = [x(n) \times h(n)] \times g(n)$. **(06 Marks)**

3 a. For each impulse response listed below, determine whether the corresponding system is memoryless, causal and stable:

i) $h(n) = (0.99)^n u(n+3)$ ii) $h(t) = e^{-3t} u(t-1)$. **(08 Marks)**

b. Evaluate the step response for the LTI system represented by the following impulse response: $h(t) = u(t+1) - u(t-1)$. **(04 Marks)**

c. Draw direct form I implementation of the corresponding systems:

$\frac{d^2y(t)}{dt^2} + 5\frac{d}{dt}y(t) + 4y(t) = x(t) + 3\frac{d}{dt}x(t)$. **(04 Marks)**

d. Determine the forced response for the system given by:

$5\,\frac{dy(t)}{dt} + 10\,y(t) = 2\,x(t)$, with input x (t) = 2 u (t). **(04 Marks)**

4 a. State and prove time shift and periodic time convolution properties of DTFS. **(06 Marks)**

b. Evaluate the DTFS representation for the signal x (n) shown in Fig.Q4(b) and sketch the spectra. **(08 Marks)**

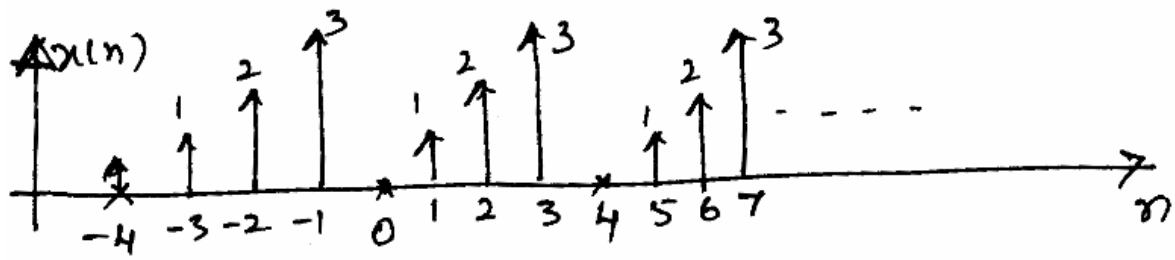

Fig.Q4(b)

c. Determine the time signal corresponding to the magnitude and phase spectra shown in Fig.Q4(c), with $W_o = \pi$. **(06 Marks)**

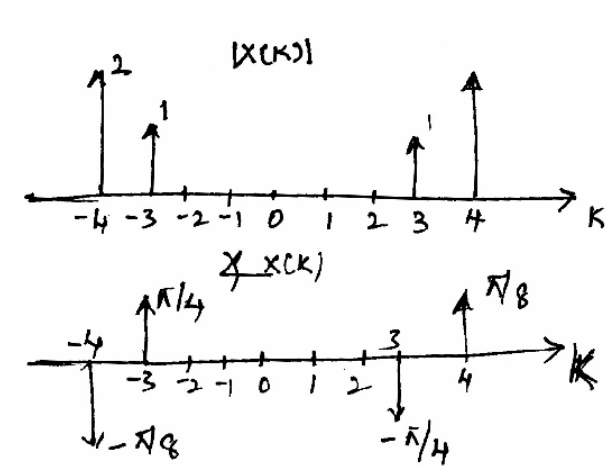

Fig.Q4(c)

PART – B

5 a. State and prove the frequency-differentiation property of DTFT. **(06 Marks)**

b. Find the time-domain signal corresponding to the DTFT shown in Fig.Q5(b). **(05 Marks)**

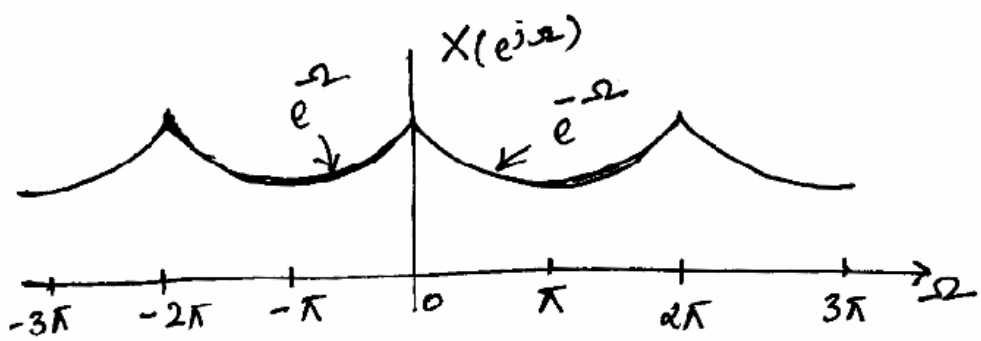

Fig.Q5(b)

c. For the signal x (t) shown in Fig.Q 5(c), evaluate the following quantities without explicitly computing x (w). **(09 Marks)**

i) $\int_{-\infty}^{\infty} x(w)\, dw$ ii) $\int_{-\infty}^{\infty} |x(w)|^2\, dw$ iii) $\int_{-\infty}^{\infty} x(w)\, e^{j2w}\, dw$.

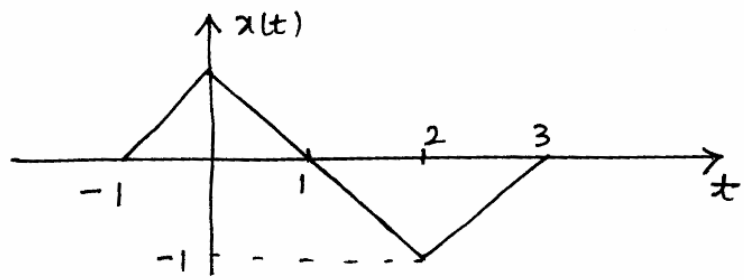

Fig.Q5(c)

6 a. The input and output of causal LTI system are described by the differential equation.

$$\frac{d^2y(t)}{dt^2} + 3\frac{dy(t)}{dt} + 2\,y(t) = x(t)$$

i) Find the frequency response of the system

ii) Find impulse response of the system

iii) What is the response of the system if $x(t) = te^{-t}\,u(t)$. **(10 Marks)**

b. Find the frequency response of the RC circuit shown in Fig.Q6(b). Also find the impulse response of the circuit. **(10 Marks)**

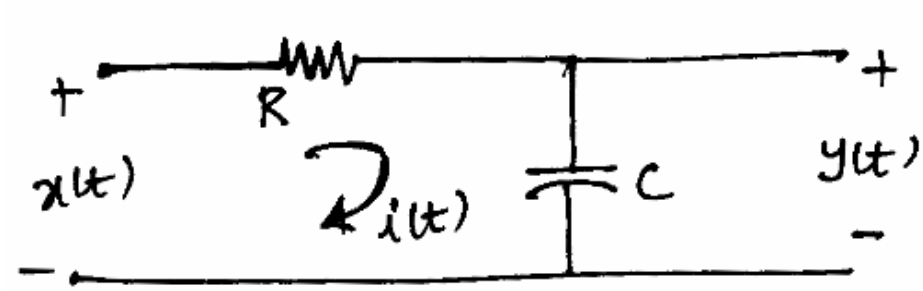

Fig.Q6(b)

7 a. Briefly list the properties of Z-Transform. **(04 Marks)**

b. Using appropriate properties, find the Z-transform $x(n) = n^2\left(\frac{1}{3}\right)^n u(n-2)$. **(06 Marks)**

c. Determine the inverse Z-transform of $x(z) = \frac{1}{2 - 4z^{-1} + 2z^{-2}}$, by long division method of:

i) ROC; $|z| > 1$. **(04 Marks)**

d. Determine all possible signals x (n) associated with Z-transform. **(06 Marks)**

$$x(z) = \frac{\left(\frac{1}{4}\right)z^{-1}}{\left[1 - \left(\frac{1}{2}\right)z^{-1}\right]\left[1 - \left(\frac{1}{4}\right)z^{-1}\right]}.$$

8 a. An LTI system is described by the equation
y (n) = x (n) + 0.81 x (n–1) – 0.81 x (n–2) – 0.45 y (n–2). Determine the transfer function of the system. Sketch the poles and zeros on the Z-plane. Assess the stability. **(05 Marks)**

b. A systems has impulse response h (n) $\left(\frac{1}{3}\right)^n$ u (n). Determine the transfer function. Also determine the input to the system if the output is given by:

$$y(n) = \frac{1}{2}u(n) + \frac{1}{4}\left(-\frac{1}{3}\right)^n u(n).$$ **(05 Marks)**

c. A linear shift invariant system is described by the difference equation.

$$y(n) - \frac{3}{4}y(n-1) + \frac{1}{8}y(n-2) = x(n) + x(n-1)$$

with y (–1) = 0 and y (–2) = –1.
Find:
i) The natural response of the system.
ii) The forced response of the system and
iii) The frequency response of the system for a step. **(10 Marks)**

* * * * *